FIBERGLASS COLUMN DETAIL
12" DIA x 8'-0"
TUSCAN CAP & BASE

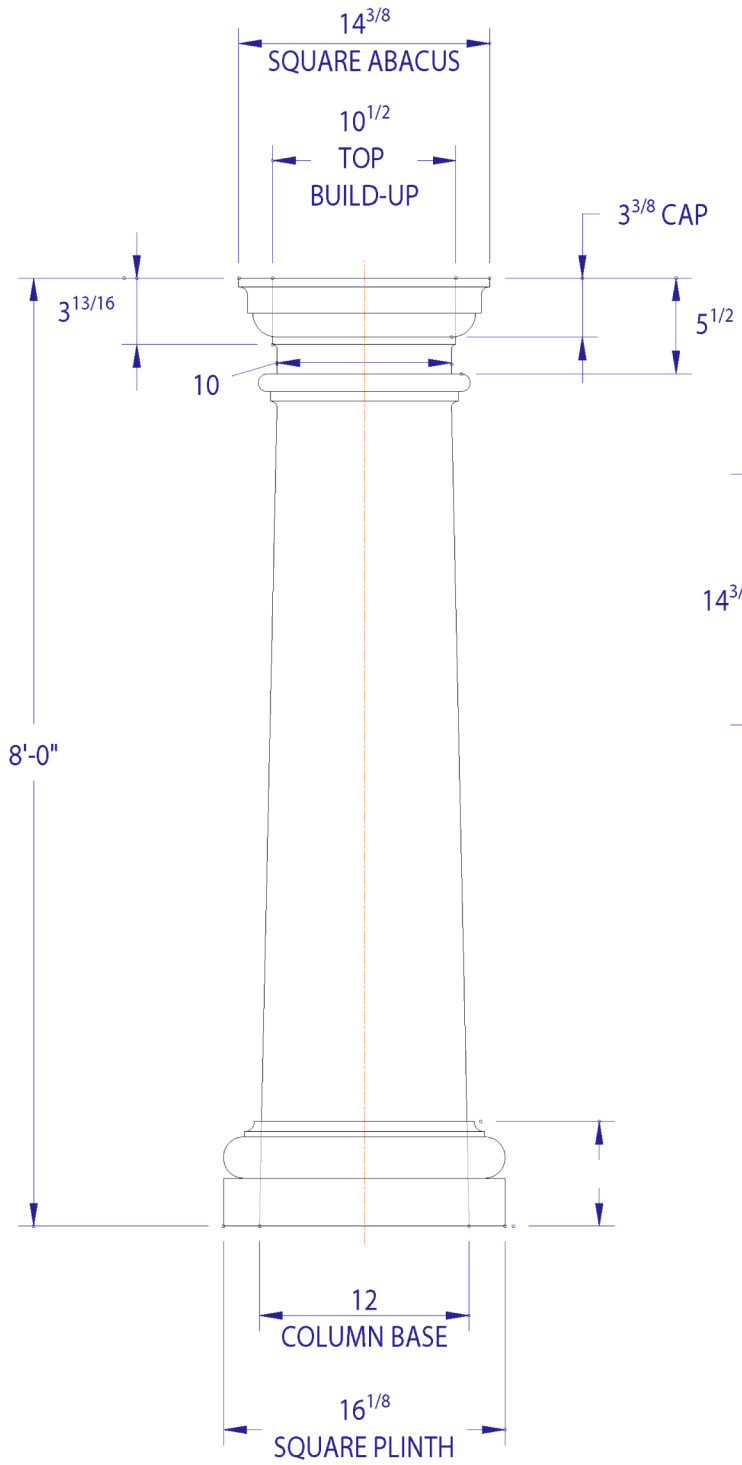

12" DIAMETER COLUMN - TUSCAN

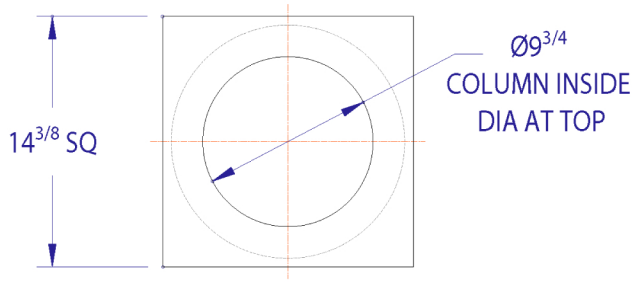

PLAN VIEW

12" x 8' COLUMN SPECIFICATIONS:

WALL THICKNESS: .125 (1/8")
WEIGHT: 33 LBS (TRIMMED)
LOAD BEARING CAPACITY: 18,000 LBS (AXIALLY)
BASE DIAMETER: 12 INCHES (NOM)
NECK DIAMETER: 10 INCHES
TOP (BUILD-UP) DIA: 10 1/2 INCHES

REV	DATE	DESCRIPTION	REVISIONS

UNLESS OTHERWISE SPECIFIED DIMENSIONS ARE IN INCHES
TOLERANCES
DECIMAL .X ±.1 .XX ±.06 .XXX ±.030
ANGULAR ±.5°
FRACTION ±1/8
FINISH
DO NOT SCALE DRAWING

CONTRACT NUMBER
ORIGINATOR T. HARTLEY DATE 10/14/03
CHECKER
TREATMENT N/A
PROJECT ENGINEER
FINISH N/A
MANUFACTURING ENGINEER
SIMILAR TO N/A ACT WT N/A CALC WT N/A
PROGRAM MANAGEMENT

FIBERGLASS SPECIALTIES INCORPORATED
P.O.BOX 1340
HENDERSON, TEXAS
75653-1340
903/657-6522
FAX# 903/657-2318

TITLE FIBERGLASS COLUMN DETAIL
12" DIA x 8'-0"
TUSCAN CAP & BASE

SIZE A DRAWING NUMBER REV -
SCALE NONE RELEASE DATE SHEET 1 OF 1